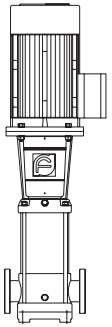

CDLF Vertical multistage stainless steel centrifugal pump

hydroo

CDL，CDLF

Performance scope

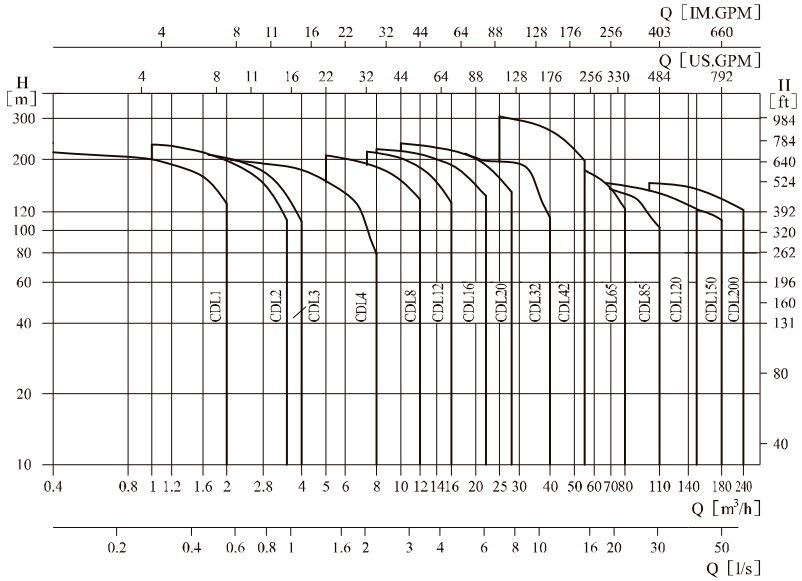

Product range

Description	CDL1	CDL2	CDL3	CDL4	CDL8	CDL12	CDL16	CDL20	CDL32	CDL42	CDL65	CDL85	CDL120	CDL150	CDL200
Rate flow [m³/h]	1	2	3	4	8	12	16	20	32	42	65	85	120	150	200
Rate flow [l/s]	0.28	0.56	0.83	1.1	2.2	3.3	4.4	5.6	8.9	11.7	18	24	33	41.6	55.6
Flow range [m³/h]	0.4-2	1-3.5	1.2-4	1.5-7	5-12	7-16	8-22	10-28	16-40	25-55	30-80	50-110	60-150	80-180	100-240
Flow range [l/s]	0.11-0.56	0.28-0.97	0.33-1.1	0.42-1.9	1.4-3.3	1.9-4.4	2.2-6.1	2.8-7.8	4.4-11.1	6.9-15.3	8..3-22.2	13.8-30.5	16.7-41.7	22-50	27.8-66.7
Max. pressure [bar]	21	23	22	21	21	22	22	23	29	30	22	17	16	16	16
Motor power [kW]	0.37-2.2	0.37-3	0.37-3	0.37-4	0.75-7.5	1.5-11	2.2-11.5	1.1-18.5	1.5-30	3.0-45	4.0-4.5	5.5-45	11-75	11-75	18.5-110
Temp. [℃]	−15～+120														
Max. efficiency [%]	44	46	54	57	62	63	66	69	73	75	76	77	74	73	79
Type															
CDL	●	●	●	●	●	●	●	●	●	●	●	●	●	●	●
CDLF	●	●	●	●	●	●	●	●	●	●	●	●	●	●	●
CDL Pipe connection															
DIN Flange	DN25	DN25	DN25	DN32	DN40	DN50	DN50	DN50	DN65	DN80	DN100	DN100	DN125	DN125	DN150
Oval Flange	G1	G1	G1	G1 1/4	G1 1/2										
CDLF Pipe connection															
DIN Flange	DN25	DN25	DN25	DN32	DN40	DN50	DN50	DN50	DN65	DN80	DN100	DN100	DN125	DN125	DN150
Cutting ferrule joint	DN32	DN32	DN32	DN32	DN50	DN50	DN50	DN50							
Pipe thread	ZG1 1/4	ZG1 1/4	ZG1 1/4	ZG1 1/4	ZG2	ZG2	ZG2	ZG2							
Oval Flange	G1	G1	G1	G1 1/4	G1 1/2										

PUMP

CDL/CDLF is a kind of vertical non-self priming multistage centrifugal pump, which is driven by a standard electric motor. The motor output shaft directly connects with the pump shaft through a coupling.The pressure-resistant cylinder and flow passage components are fixed between pump head and inlet&outlet section with stay bolts.The inlet and outlet are located at the pump bottom at the same plane. This kind of pump can be equ-ipped with an intelligent protector to effectively prevent it from dry-running. out-of-phase and overload.

Motor

Full-enclosed air-blast two-pole standard motor
Protection class: IP55
Insulation class:F
Standard voltage: 50HZ: 1×220-230/240V
3×200-220/346-380V
3×220-240/380-415V
3×380-415V

Application

CDL/CDLF is a kind of multifunctional products. It can be used to convey various medium from tap water to industrial liquid at different temperature and with different flow rate and pressure. CDL type is applicable to conveying non-corrosive liquid, while CDLF is suitable for slightly corrosive liquid.

- Water supply: Water filter and transport in waterworks boosting of main pipeline, boosting in high-rise buildings.
- Industrial boosting: process flow water system, cleaning system, high-pressure washing system, fire fighting system.
- Industrial liquid conveying: Cooling and air-conditioning system, boiler water supply and condensing system, machine-associated purpose, acids and alkali.
- Water treatment: Ultra filtration system, reverse osmosis system distillation system, separator, swimming pool.
- Irrigation: Farmland irrigation, spray irrigation, dripping irrigation.

Operation conditions

- Thin, clean, non-flammable and non-explosive liquid containing no solid granules and fibers
- Liquid temperature:

Normal temperature type:-15℃～+70℃,
Hot water type: -15℃～+120℃

- Ambient temperature: up to +40℃
- Altitude: up to 1000m

hydroo

Definition of model

CDL/CDLF1,2,3,4,8,12,16 and 20

CDL F 8 — 2 / 1

- 1: Number of impeller
- 2: Stage
- 8: Rated flow(m^3/h)
- F: (Common type omitted)Flow passage components are of stainless steel 304 or 316L
- CDL: Light vertical multistage centrifugal pump

CDL/CDLF32,42,65,85,120 and 150

CDL F 32 — 30 / 2

- 2: Number of small impeller
- 30: Stage × 10
- 32: Rated flow(m^3/h)
- F: (Common type omitted) Flow passage components are of stainless steel 304 or 316L
- CDL: Light vertical multistage centrifugal pump

CDL/CDLF200

CDL F 200 — 30 — 2A — B

- B: One small impeller B
- 2A: Two small impellers A
- 30: Stage × 10
- 200: Rated flow(m^3/h)
- F: (Common type omitted) Flow passage components are of stainless steel 304 or 316L
- CDL: Light vertical multistage centrifugal pump

Max. working pressure

Model	Curve number
CDL1,2,3,4 Flange	2
CDL(F) 1,2,3,4 Oval Flange	1
CDLF1,2,3,4 Flange,cutting ferrule joint, pipe thread	2
CDL8,12,16,20 Flange	3
CDL(F)8 Oval Flange	1
CDLF8,12,16,20 Flange,cutting ferrule joint, pipe thread	3
CDL32	
32-10-1 ~ 32-80	1(*)
32-90-2 ~ 32-160	5
CDLF32	5
CDL42	
42-10-1 ~ 42-60-2	1(*)
42-60 ~ 42-90	4(*)
42-100-2 ~ 42-130-2	5
CDLF42	
42-10-1 ~ 42-90	4(*)
42-100-2 ~ 42-130-2	5
CDL65	
65-10-1 ~ 65-50-2	1(**)
65-50-1 ~ 65-80-1	4
CDL85	
85-10-1 ~ 85-40-2	1(**)
85-40 ~ 85-60	4
CDLF65,85	4
CDL,CDLF120,150,200	6

*: For curve 5, need to specify especially; **: For curve 4, need to specify especially.

The following figure shows the limitation of pressure and temperature, which shall be in the scope as shown in the figure.

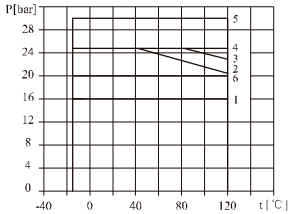

Max. Ambinent temperature

When the pump operates under ambient temperature higher than 40℃ or under altitude higher than 1000m, because of low air density and poor cooling effects, the motor output power P2 will be decreased to certain extent. If the pump is operated under the above-said conditions, it should be equipped with motor of higher power.

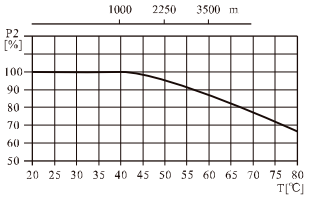

hydroo

Curve illustration

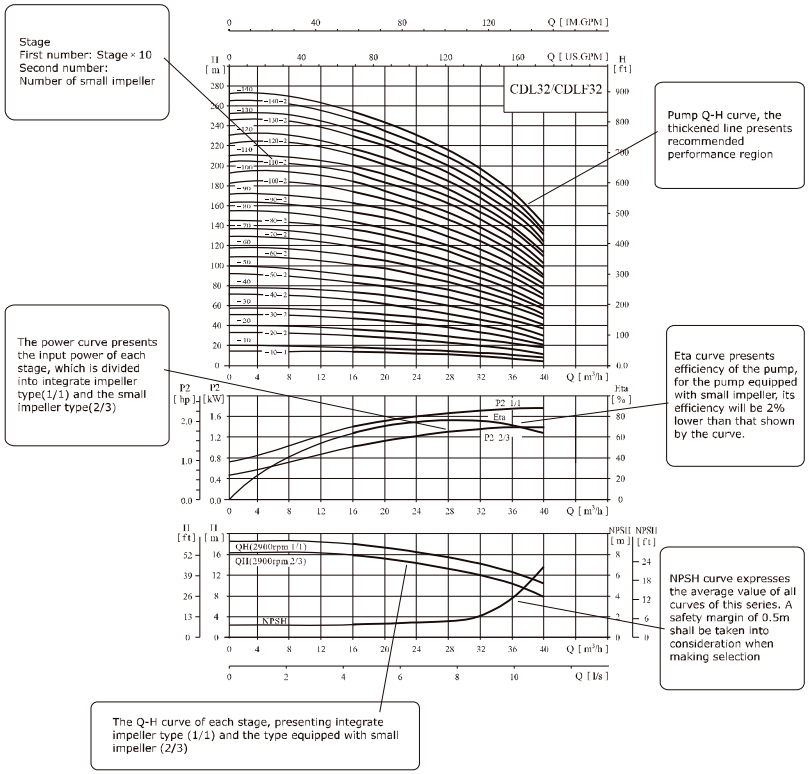

Performance curve

Following conditions are suitable for the performance curves shown below:

1.All curves are based on the measured values of 50HZ: constant motor speed 2900rpm or 2950rpm.

2.Curve tolerance in conformity with ISO9906 Annex A.

3.Measurement is done with 20℃ air-free water, kinematic viscosity of $1mm^2/sec$.

4.The operation of pump shall refer to the performance region indicated by the thickened curve to prevent over-heating due to too small flow rate or overload of motor due to too large flow rate.

Minimum inlet pressure NPSH

In case that the pressure in pump is lower than the steam pressure used to convey liquid, the cavitations will occur. To avoid cavitations, a minimum pressure at the inlet side of the pump shall be guaranteed.

The maximum suction stroke can be calculated with following formula:H=Pb×10.2-NPSH-Hf-Hv-Hs

Pb=atmosphere pressure [bar] (can be set as 1bar)

In a closed system, Pb means system pressure [bar]

NPSH=Net positive suction head [m]

(It can be read out from the point of possible max. Flow rate shown on NPSH curve)

Hf=Pipeline loss at the inlet[m]

Hv=Steam pressure[m]

Hs=Safety margin=Minimum 0.5m delivery head

If the calculated result H is positive, the pump may Run under the max. Suction stroke H.

In case the calculated result H is negative, a delivery head of min. Inlet pressure is necessary.

Operation in parallel connecting several pumps in paraller running will benefit much more than running a single large pump.

Applicable to different working states necessary in a variable flow system.

Increasing the possibility of water supply when the pump is in failure, because in case of pump failure, only part of the system flow is effected.

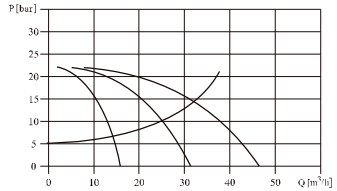

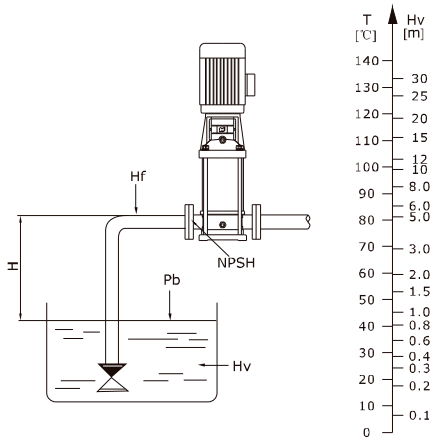

hydroo

Sectional drawing CDL/CDLF1,2,3,4

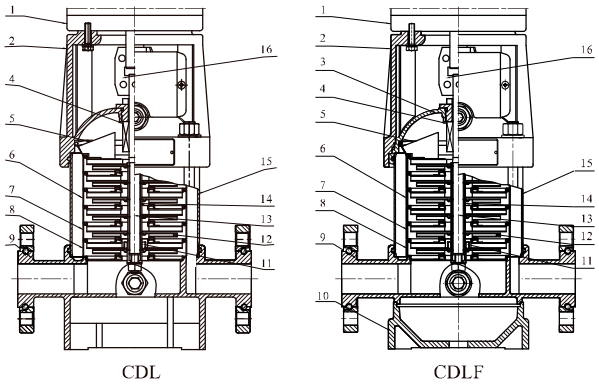

Material CDL/CDLF1,2,3,4

NO.	Name	Material	AISI/ASTM
1	Motor		
2	Pump head	Cast iron	ASTM25B
4	Mechanical seal		
5	Top diffuser	Stainless steel	AISI304
6	Diffuser	Stainless steel	AISI304
7	Support diffuser	Stainless steel	AISI304
8	Inducer	Stainless steel	AISI304
11	Bearing	tungsten carbide	
12	Impeller	Stainless steel	AISI304
13	Shaft	Stainless steel	AISI304 AISI316L
14	Impeller sleeve	Stainless steel	AISI304
15	Cylinder	Stainless steel	AISI304
16	Coupling	Carbon steel	
CDLF			
3	Seal base	Stainless steel	AISI304
9	Inlet and outlet chamber	Stainless steel	AISI304
10	base plate	Cast iron	ASTM25B
CDL			
9	Inlet and outlet chamber	Cast iron	ASTM25B

Sectional drawing CDL/CDLF8,12,16,20

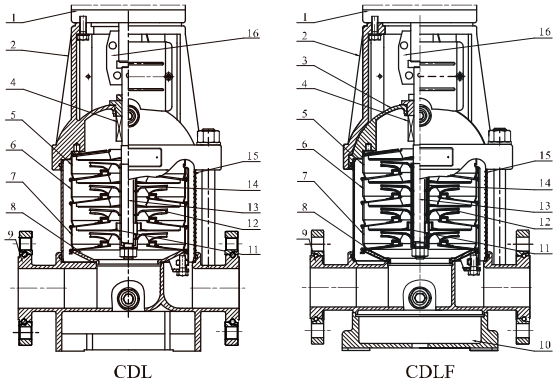

Material CDL/CDLF8,12,16,20

NO.	Name	Material	AISI/ASTM
1	Motor		
2	Pump head	Cast iron	ASTM25B
4	Mechanical seal		
5	Top diffuser	Stainless steel	AISI304
6	Diffuser	Stainless steel	AISI304
7	Support diffuser	Stainless steel	AISI304
8	Inducer	Stainless steel	AISI304
11	Bearing	tungsten carbide	
12	Impeller	Stainless steel	AISI304
13	Shaft	Stainless steel	AISI304 AISI316L
14	Impeller sleeve	Stainless steel	AISI304
15	Cylinder	Stainless steel	AISI304
16	Coupling	Carbon steel	
CDLF			
3	Seal base	Stainless steel	AISI304
9	Inlet and outlet chamber	Stainless steel	AISI304
10	base plate	Cast iron	ASTM25B
CDL			
9	Inlet and outlet chamber	Cast iron	ASTM25B

CDL，CDLF

Sectional drawing CDL/CDLF32,42,65,85

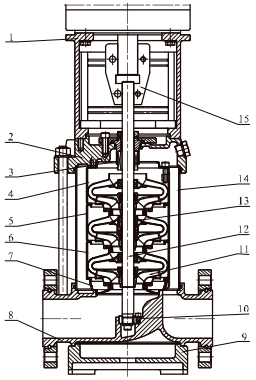

Material CDL/CDLF32,42,65,85

NO.	Name	Material	AISI/ASTM
1	Bracket	Cast iron	ASTM25B
3	Mechanical seal		
4	Top diffuser	Stainless steel	AISI304
5	Support diffuser	Stainless steel	AISI304
6	Diffuser	Stainless steel	AISI304
7	Inducer	Stainless steel	AISI304
9	Base plate	Cast iron	ASTM25B
10	Bottom bearing	tungsten carbide	
11	Impeller	Stainless steel	AISI304
12	Shaft	Stainless steel	AISI316L AISI304 AISI431
13	Intermediate bearing	tungsten carbide	
14	Cylinder	Stainless steel	AISI304
15	Coupling	Carbon steel	
	Rubber parts	NBR	
CDL			
2	Pump head	Cast iron	ASTM25B
8	Inlet and outlet chamber	Cast iron	ASTM25B
CDLF			
2	Pump head	Stainless steel	AISI304
8	Inlet and outlet chamber	Stainless steel	AISI304

Sectional drawing CDL/CDLF120,150,200

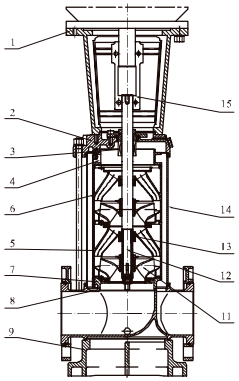

Material CDL/CDLF120,150,200

NO.	Name	Material	AISI/ASTM
1	Bracket	Cast iron	ASTM25B
3	Mechanical seal		
4	Discharge	Stainless steel	AISI304
5	Support diffuser	Stainless steel	AISI304
6	Diffuser	Stainless steel	AISI304
7	Inducer	Stainless steel	AISI304
9	Base plate	Cast iron	ASTM 80-55-06
11	Impeller	Stainless steel	AISI304
12	Shaft	Stainless steel	AISI304
13	Bearing	tungsten carbide	
14	Cylinder	Stainless steel	AISI304
15	Coupling	Carbon steel	
	Rubber parts	NBR	
CDL			
2	Pump head	Cast iron	ASTM 80-55-06
8	Inlet and outlet chamber	Cast iron	ASTM 80-55-06
CDLF			
2	Pump head	Stainless steel	AISI304
8	Inlet and outlet chamber	Stainless steel	AISI304

hydroo

Performance curve ISO9906 Annex A 2900rpm

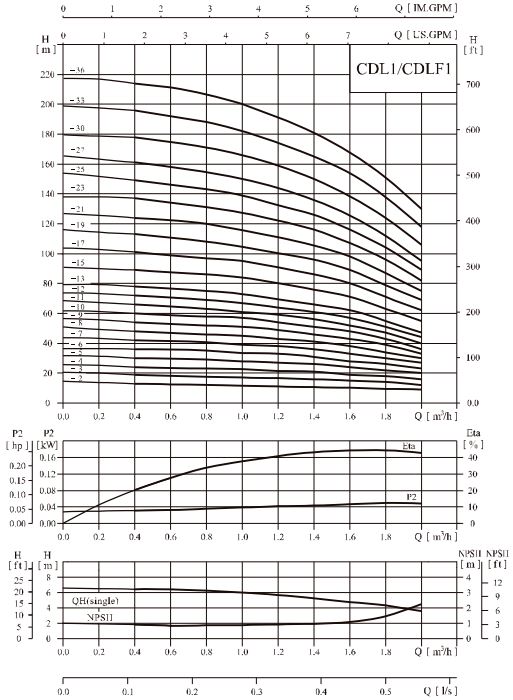

Installation sketch

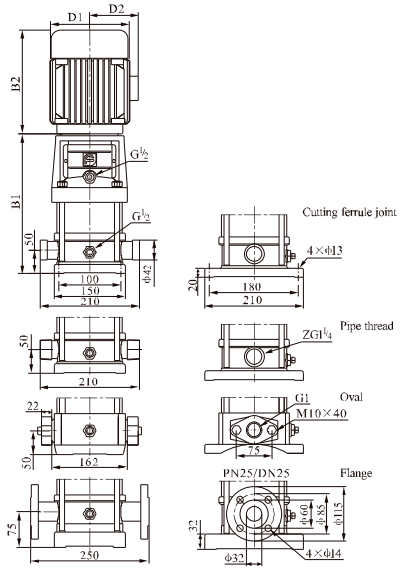

CDL1-25 ~ 1-36 sub-connection of pipeline has no oval flange connection.
The overall dimensions of the single-phase motor and explosion-proof motor are a little different.
Pls contact us for details.

Performance table

Model	Driving motor (kW)	Driving motor (hp)	Q (m³/h)	0.4	0.6	0.8	1.0	1.2	1.4	1.6	1.8	2.0
CDL1-2	0.37	0.5	H (m)	13	12.5	12	11.5	11	10.5	10	9.5	9
CDL1-3	0.37	0.5		19	18	17.5	17	16.5	16	15	14	12
CDL1-4	0.37	0.5		24	23.5	23	22.5	21.5	21	19	18	16
CDL1-5	0.37	0.5		30	29.6	29	28	27	26	24	22	20
CDL1-6	0.37	0.5		36	35.5	35	33.5	33	31	28	26	23
CDL1-7	0.37	0.5		42	41	40.5	39	38	36	33	30	27
CDL1-8	0.55	0.75		48	47	46	45	43	41	38	34	30
CDL1-9	0.55	0.75		54	53	52	51	49	46	43	39	33
CDL1-10	0.55	0.75		60	59	58	57	54	51	48	43	36
CDL1-11	0.55	0.75		66	65	63	61	59	56	52	47	40
CDL1-12	0.75	1		72	71	69	67	64	61	57	51	44
CDL1-13	0.75	1		78	77	75	73	69	66	62	55	47
CDL1-15	0.75	1		89	88	86	84	79	76	71	63	55
CDL1-17	1.1	1.5		101	99	97	95	89	86	80	71	62
CDL1-19	1.1	1.5		113	110	108	106	99	96	89	79	69
CDL1-21	1.1	1.5		124	122	120	117	110	106	98	87	75
CDL1-23	1.1	1.5		137	133	131	128	121	116	107	96	82
CDL1-25	1.5	2		149	145	143	139	131	126	116	104	89
CDL1-27	1.5	2		161	157	155	150	141	136	125	112	95
CDL1-30	1.5	2		178	175	171	166	157	150	139	124	106
CDL1-33	2.2	3		196	192	188	183	173	165	154	137	118
CDL1-36	2.2	3		214	210	205	200	190	181	169	151	130

Size and weight

Model	Size(mm) B1	B2	B1+B2	D1	D2	Weight (kg)
CDL1-2	258	225	483	148	117	20
CDL1-3	276	225	501	148	117	20
CDL1-4	294	225	519	148	117	21
CDL1-5	312	225	537	148	117	21
CDL1-6	330	225	555	148	117	22
CDL1-7	348	225	573	148	117	23
CDL1-8	366	225	591	148	117	24
CDL1-9	384	225	609	148	117	25
CDL1-10	402	225	627	148	117	26
CDL1-11	420	225	645	148	117	26
CDL1-12	448	245	693	170	142	29
CDL1-13	466	245	711	170	142	30
CDL1-15	502	245	747	170	142	31
CDL1-17	538	245	783	170	142	33
CDL1-19	574	245	819	170	142	34
CDL1-21	610	245	855	170	142	35
CDL1-23	646	245	891	170	142	36
CDL1-25	692	290	982	190	155	42
CDL1-27	728	290	1018	190	155	43
CDL1-30	782	290	1072	190	155	45
CDL1-33	836	290	1126	190	155	49
CDL1-36	890	290	1180	190	155	51

hydroo

CDL，CDLF2

Performance curve ISO9906 Annex A 2900rpm

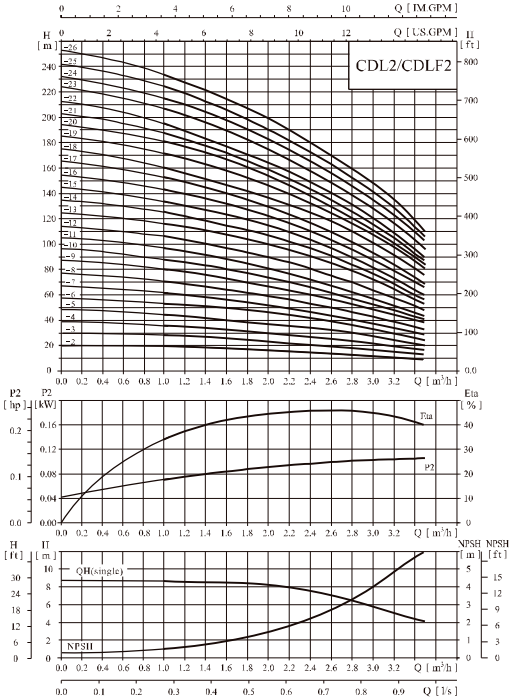

Installation sketch

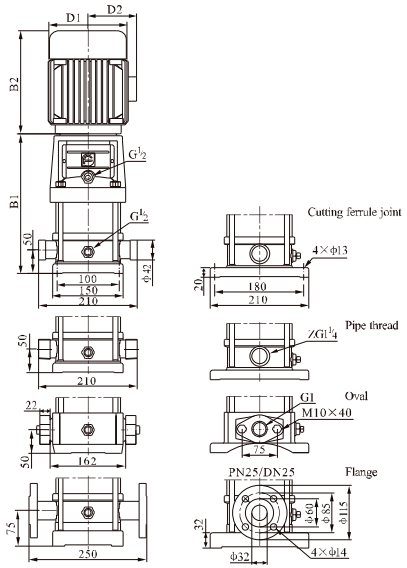

CDL2-18/ ~2-26 sub-connection of pipeline has no oval flange connection.
The overall dimensions of the single-phase motor and explosion-proof motor are a little different.
Pls contact us for details.

Performance table

Model	Driving motor (kW)	Driving motor (hp)	Q (m³/h)	1	1.2	1.6	2.0	2.4	2.8	3.2	3.5
CDL2-2	0.37	0.5	H (m)	18	17	16	15	13	12	10	8
CDL2-3	0.37	0.5		27	26	24	22	20	18	15	12
CDL2-4	0.55	0.75		36	35	33	30	26	24	20	16
CDL2-5	0.55	0.75		45	43	40	37	33	30	24	20
CDL2-6	0.75	1		53	52	50	45	40	36	30	24
CDL2-7	0.75	1		63	61	57	52	47	41	35	28
CDL2-9	1.1	1.5		80	78	73	67	61	54	45	37
CDL2-11	1.1	1.5		98	95	89	82	73	64	54	44
CDL2-13	1.5	2		116	114	106	98	89	78	65	52
CDL2-15	1.5	2		134	130	123	112	100	90	73	60
CDL2-18	2.2	3		161	157	148	136	121	108	91	76
CDL2-22	2.2	3		197	192	180	165	148	130	110	90
CDL2-26	3.0	4		232	228	214	198	179	158	130	110

Size and weight

Model	Size(mm) B1	B2	B1+B2	D1	D2	Weight (kg)
CDL2-2	258	225	483	148	117	20
CDL2-3	276	225	501	148	117	20
CDL2-4	294	225	519	148	117	22
CDL2-5	312	225	537	148	117	23
CDL2-6	340	245	585	170	142	26
CDL2-7	358	245	603	170	142	26
CDL2-9	394	245	639	170	142	28
CDL2-11	430	245	675	170	142	29
CDL2-13	476	290	766	190	155	35
CDL2-15	512	290	802	190	155	36
CDL2-18	566	290	856	190	155	41
CDL2-22	638	290	928	190	155	42
CDL2-26	720	345	1035	197	165	52

Performance curve ISO9906 Annex A 2900rpm

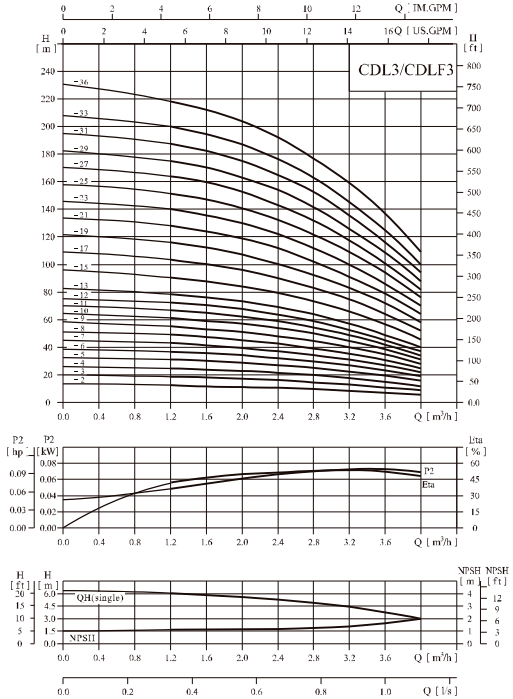

Installation sketch

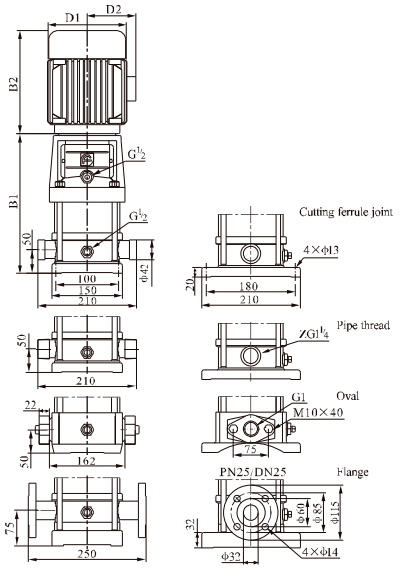

CDL3-25/ ~3-26 sub-connection of pipeline has no oval flange connection.
The overall dimensions of the single-phase motor and explosion-proof motor are a little different.
Pls contact us for details.

Performance table

Model	Driving motor (kW)	Driving motor (hp)	Q (m³/h)	1.2	1.6	2.0	2.4	2.8	3.0	3.2	3.6	4.0
CDL3-2	0.37	0.5	H (m)	12.5	11.5	11	10.5	10	9	8	7	6
CDL3-3	0.37	0.5		19	18.5	17.5	16.5	15	14	13	11	9
CDL3-4	0.37	0.5		25	24	23	21.5	20	19	18	15	12
CDL3-5	0.37	0.5		31	30	29	27	25	23	22	19	16
CDL3-6	0.55	0.75		36	35	34	32	30	28	27	23	19
CDL3-7	0.55	0.75		43	41	39	37	34	32	31	27	22
CDL3-8	0.75	1		49	47	45	43	39	37	35	31	25
CDL3-9	0.75	1		55	53	51	48	45	42	40	35	28
CDL3-10	0.75	1		61	59	57	54	50	47	45	39	31
CDL3-11	1.1	1.5		67	64	61	58	54	51	49	42	34
CDL3-12	1.1	1.5		73	70	67	63	58	55	52	45	37
CDL3-13	1.1	1.5		78	76	73	69	64	60	57	49	40
CDL3-15	1.1	1.5		90	88	84	79	73	69	66	57	46
CDL3-17	1.5	2		103	100	96	90	83	79	75	64	52
CDL3-19	1.5	2		115	112	107	100	92	88	83	72	58
CDL3-21	2.2	3		128	124	119	112	102	98	91	79	64
CDL3-23	2.2	3		140	135	130	122	112	107	100	86	70
CDL3-25	2.2	3		151	147	141	131	122	116	109	94	76
CDL3-27	2.2	3		164	159	152	143	132	124	117	101	82
CDL3-29	2.2	3		175	170	163	153	142	133	126	109	88
CDL3-31	3.0	4		187	182	175	165	153	142	135	116	94
CDL3-33	3.0	4		199	194	187	176	163	151	145	125	100
CDL3-36	3.0	4		218	212	204	192	178	168	159	137	109

Size and weight

Model	Size(mm) B1	B2	B1+B2	D1	D2	Weight (kg)
CDL3-2	258	225	483	148	117	20
CDL3-3	276	225	501	148	117	20
CDL3-4	294	225	519	148	117	21
CDL3-5	312	225	537	148	117	21
CDL3-6	330	225	555	148	117	23
CDL3-7	348	225	573	148	117	24
CDL3-8	376	245	621	170	142	27
CDL3-9	394	245	639	170	142	28
CDL3-10	412	245	657	170	142	28
CDL3-11	430	245	675	170	142	29
CDL3-12	448	245	693	170	142	30
CDL3-13	466	245	711	170	142	31
CDL3-15	502	245	747	170	142	32
CDL3-17	548	290	838	190	155	38
CDL3-19	584	290	874	190	155	39
CDL3-21	620	290	910	190	155	42
CDL3-23	656	290	946	190	155	43
CDL3-25	692	290	982	190	155	44
CDL3-27	728	290	1018	190	155	45
CDL3-29	764	290	1054	190	155	46
CDL3-31	810	345	1155	197	165	54
CDL3-33	846	345	1191	197	165	55
CDL3-36	900	345	1245	197	165	57

hydroo

CDL，CDLF4

Performance curve ISO9906 Annex A 2900rpm

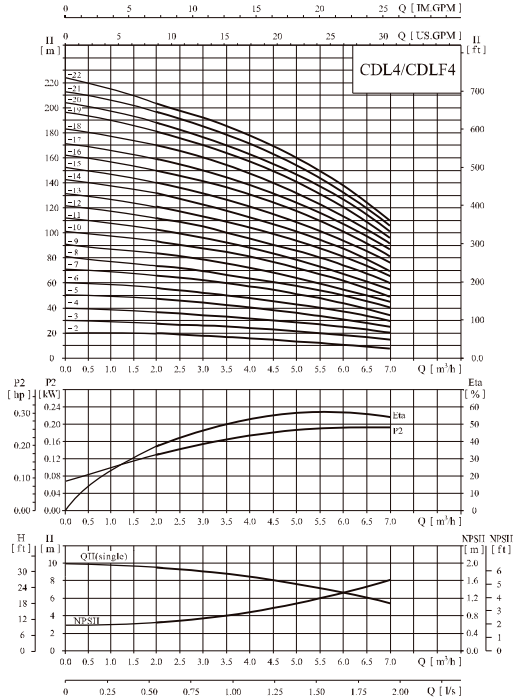

Installation sketch

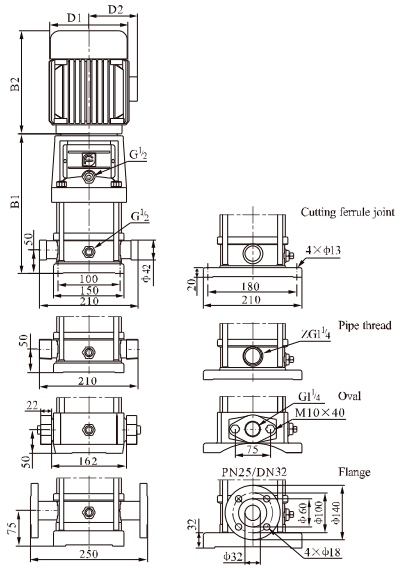

CDL4-19/ ~4-22 sub-connection of pipeline has no oval flange connection.
The overall dimensions of the single-phase motor and explosion-proof motor are a little different.
Pls contact us for details.

Performance table

Model	Driving motor (kW)	Driving motor (hp)	Q (m³/h)	1.5	2.0	3.0	4.0	5.0	6.0	7.0
CDL4-2	0.37	0.5	H (m)	19	18	17	15	13	10	8
CDL4-3	0.55	0.75		28	27	26	24	20	18	13
CDL4-4	0.75	1		38	36	34	32	27	24	19
CDL4-5	1.1	1.5		47	45	43	40	34	31	23
CDL4-6	1.1	1.5		56	54	52	48	41	37	28
CDL4-7	1.5	2		66	63	61	56	48	43	33
CDL4-8	1.5	2		74	72	70	64	55	50	38
CDL4-10	2.2	3		96	90	87	81	71	62	48
CDL4-12	2.2	3		114	108	104	95	85	75	58
CDL4-14	3.0	4		136	126	122	112	101	89	68
CDL4-16	3.0	4		152	144	140	129	115	101	78
CDL4-19	4.0	5.5		183	171	168	153	137	122	93
CDL4-22	4.0	5.5		211	200	192	178	160	138	108

Size and weight

Model	Size(mm) B1	B2	B1+B2	D1	D2	Weight (kg)
CDL4-2	276	225	501	148	117	21
CDL4-3	303	225	528	148	117	22
CDL4-4	340	245	585	170	142	25
CDL4-5	367	245	612	170	142	27
CDL4-6	394	245	639	170	142	27
CDL4-7	431	290	721	190	155	33
CDL4-8	458	290	748	190	155	33
CDL4-10	512	290	802	190	155	37
CDL4-12	566	290	856	190	155	38
CDL4-14	630	345	975	197	165	46
CDL4-16	684	345	1029	197	165	48
CDL4-19	765	355	1120	230	188	57
CDL4-22	846	355	1201	230	188	59

Performance curve ISO9906 Annex A 2900rpm

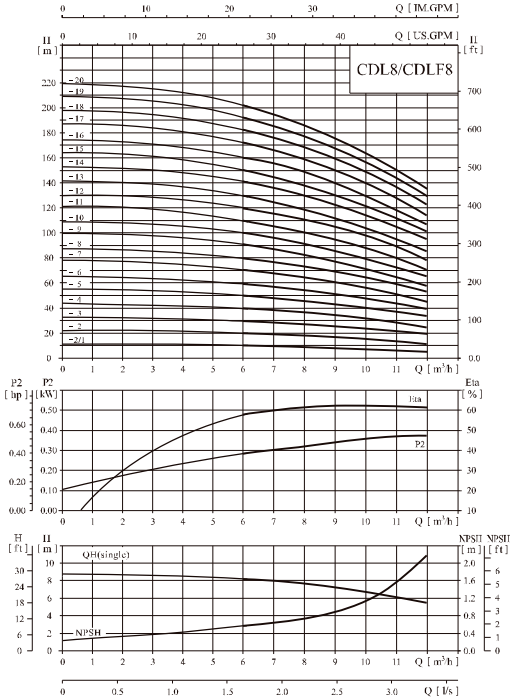

Installation sketch

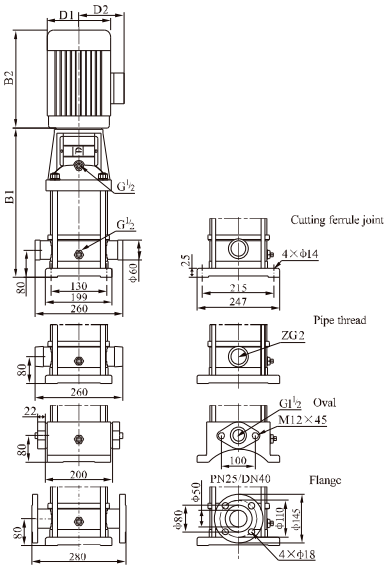

CDL8-14/ ~8-20 sub-connection of pipeline has no oval flange connection.
The overall dimensions of the single-phase motor and explosion-proof motor are a little different.
Pls contact us for details.

Performance table

Model	Driving motor (kW)	Driving motor (hp)	Q (m^3/h)	5	6	7	8	9	10	11	12
CDL8-2/1	0.75	1	H (m)	10	9.5	9.3	9	8.5	8	7	6
CDL8-2	0.75	1		20	19.5	19	18	17	16	14	13
CDL8-3	1.1	1.5		30	29.5	28.5	27	25	24	21	19
CDL8-4	1.5	2		41	39.5	38	36	34	32	28	26
CDL8-5	2.2	3		52	50	48	45	42	40	36	32
CDL8-6	2.2	3		62	60	57	54	51	48	43	39
CDL8-8	3.0	4		83	80	77	73	69	65	58	52
CDL8-10	4.0	5.5		104	100	97	92	87	81	73	65
CDL8-12	4.0	5.5		124	120	116	111	104	92	87	78
CDL8-14	5.5	7.5		145	141	136	130	122	113	102	92
CDL8-16	5.5	7.5		166	161	156	148	139	130	118	106
CDL8-18	7.5	10		187	182	175	167	157	146	134	120
CDL8-20	7.5	10		208	202	195	186	175	163	150	135

Size and weight

Model	Size(mm) B1	B2	B1+B2	D1	D2	Weight (kg)
CDL8-2/1	347	245	592	170	142	32
CDL8-2	347	245	592	170	142	32
CDL8-3	377	245	622	170	142	34
CDL8-4	417	290	707	190	155	40
CDL8-5	447	290	737	190	155	44
CDL8-6	477	290	767	190	155	45
CDL8-8	547	345	892	197	165	53
CDL8-10	607	355	962	230	188	64
CDL8-12	667	355	1022	230	188	66
CDL8-14	747	390	1137	260	208	81
CDL8-16	807	390	1197	260	208	84
CDL8-18	867	390	1257	260	208	93
CDL8-20	927	390	1317	260	208	94

Performance curve ISO9906 Annex A 2900rpm

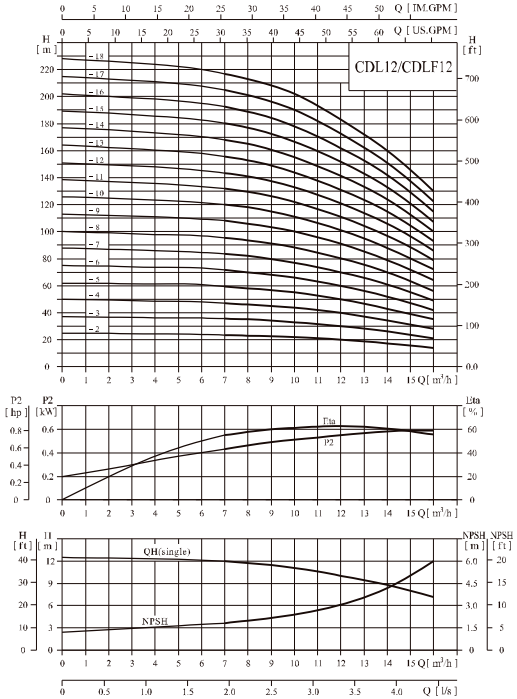

Installation sketch

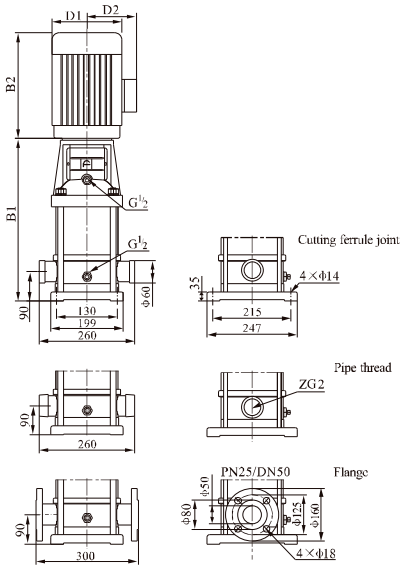

The overall dimensions of the single-phase motor and explosion-proof motor are a little different. Pls contact us for details.

Performance table

Model	Driving motor (kW)	Driving motor (hp)	Q (m³/h)	7	8	9	10	11	12	13	14	15	16
CDL12-2	1.5	2	H (m)	23.5	23	22.5	22	21	20	18.5	17	15.5	14
CDL12-3	2.2	3		35.5	35	34	33	31.5	30	28	26	23.5	21
CDL12-4	3	4		47	46	45	44	42	40	37	34	31	28
CDL12-5	3	4		59.5	58	56.5	55	52.5	50	46.5	43	39	35
CDL12-6	4	5.5		71.5	70	68	66	63	60	56	52	47	42
CDL12-7	5.5	7.5		83.5	82	79.5	77	73.5	70	65.5	61	55	49
CDL12-8	5.5	7.5		95.5	94	91	88	84	80	75	70	63	56
CDL12-9	5.5	7.5		108	106	103	100	95.5	91	85	79	71.5	64
CDL12-10	7.5	10		120	118	114.5	111	106	101	94.5	88	80	72
CDL12-12	7.5	10		143.5	141	137	133	127	121	113..5	106	96	86
CDL12-14	11	15		168	165	160	155	148	141	132.5	124	112	100
CDL12-16	11	15		192.5	189	183.5	178	170	162	152	142	128.5	115
CDL12-18	11	15		217	213	207.5	202	192.5	183	171.5	160	145	130

Size and weight

Model	Size(mm) B1	B2	B1+B2	D1	D2	Weight (kg)
CDL12-2	367	290	657	190	155	39
CDL12-3	397	290	687	190	155	43
CDL12-4	437	345	782	197	165	51
CDL12-5	467	345	812	197	165	53
CDL12-6	497	355	852	230	188	61
CDL12-7	547	390	937	260	208	73
CDL12-8	577	390	967	260	208	74
CDL12-9	607	390	997	260	208	76
CDL12-10	637	390	1027	260	208	83
CDL12-12	697	390	1087	260	208	87
CDL12-14	845	500	1345	330	255	157
CDL12-16	905	500	1405	330	255	161
CDL12-18	965	500	1465	330	255	164

Performance curve ISO9906 Annex A 2900rpm

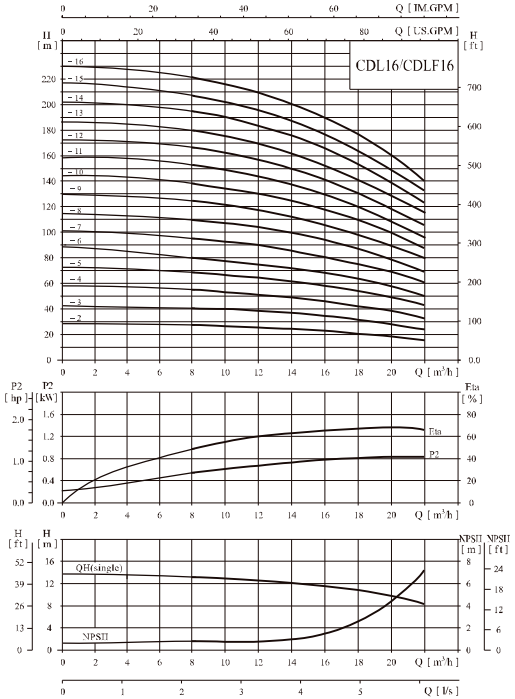

Installation sketch

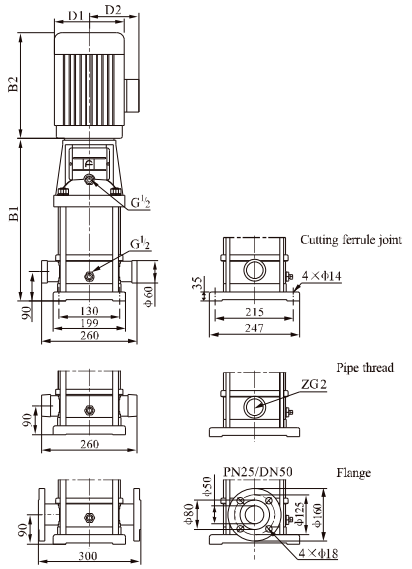

The overall dimensions of the single-phase motor and explosion-proof motor are a little different. Pls contact us for details.

Performance table

Model	Driving motor		Q (m^3/h)	8	10	12	14	16	18	20	22
	(kW)	(hp)									
CDL16-2	2.2	3	H (m)	27	26	25	24	22	21	19	16
CDL16-3	3.0	4		41	40	38	37	34	32	29	25
CDL16-4	4.0	5.5		54	53	52	49	46	43	38	34
CDL16-5	5.5	7.5		68	67	65	62	58	54	48	43
CDL16-6	5.5	7.5		82	80	78	74	70	64	58	52
CDL16-7	7.5	10		96	95	91	87	82	76	68	61
CDL16-8	7.5	10		110	108	104	99	94	86	77	70
CDL16-10	11	15		138	136	131	125	118	109	97	87
CDL16-12	11	15		166	162	157	150	141	130	116	105
CDL16-14	15	20		194	190	184	175	166	152	136	122
CDL16-16	15	20		222	217	210	200	189	174	156	140

Size and weight

Model	Size(mm)					Weight (kg)
	B1	B2	B1+B2	D1	D2	
CDL16-2	397	290	687	190	155	42
CDL16-3	452	345	797	197	165	50
CDL16-4	497	355	852	230	188	59
CDL16-5	562	390	952	260	208	76
CDL16-6	607	390	997	260	208	77
CDL16-7	652	390	1042	260	208	84
CDL16-8	697	390	1087	260	208	86
CDL16-10	875	500	1375	330	255	158
CDL16-12	965	500	1465	330	255	161
CDL16-14	1055	500	1555	330	255	174
CDL16-16	1145	550	1645	330	255	178

Performance curve ISO9906 Annex A 2900rpm

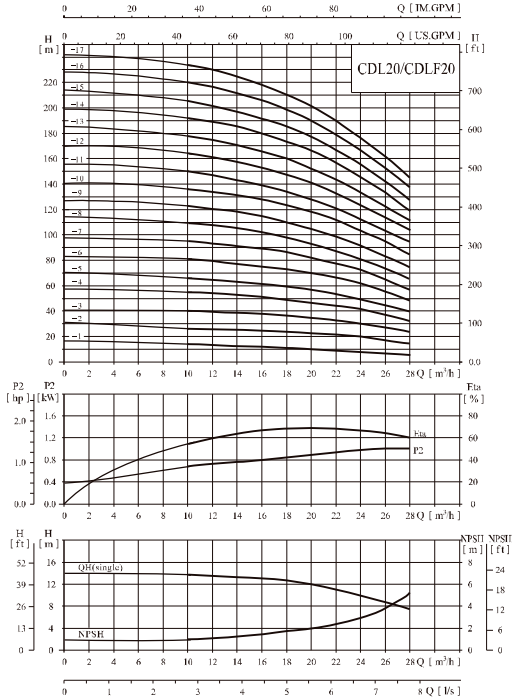

Installation sketch

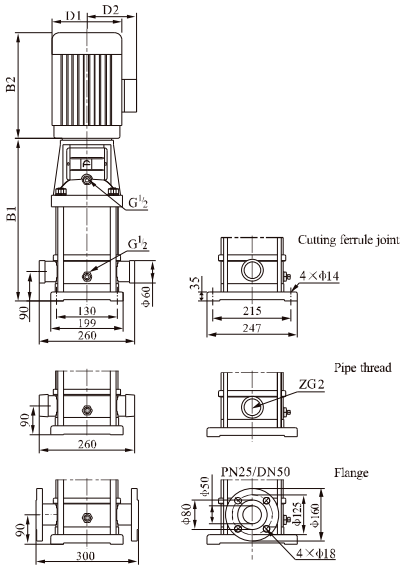

The overall dimensions of the single-phase motor and explosion-proof motor are a little different. Pls contact us for details.

Performance table

Model	Driving motor (kW)	Driving motor (hp)	Q (m³/h)	10	12	14	16	18	20	22	24	26	28
CDL20-1	1.1	1.5	H (m)	13.5	13	12.5	12	11	10	9	8	7	6
CDL20-2	2.2	3		27	26.5	26	25	24	23	22	20	18	15
CDL20-3	4.0	5.5		40	39.5	39	38	37	35	33	30	27	24
CDL20-4	5.5	7.5		54	53	52	51	49	47	44	41	37	33
CDL20-5	5.5	7.5		67	66	64	62	60	58	55	50	45	40
CDL20-6	7.5	10		81	79	77	75	73	70	66	61	55	49
CDL20-7	7.5	10		95	93	91	89	86	82	77	71	65	58
CDL20-8	11	15		109	107	105	102	99	94	89	82	75	67
CDL20-10	11	15		136	134	131	128	124	118	111	103	95	85
CDL20-12	15	20		164	162	158	154	149	142	133	124	114	102
CDL20-14	15	20		192	189	185	180	174	166	156	145	133	119
CDL20-17	18.5	25		234	230	225	219	212	202	190	177	162	145

Size and weight

Model	Size(mm) B1	B2	B1+B2	D1	D2	Weight (kg)
CDL20-1	387	245	632	170	142	33
CDL20-2	397	290	687	190	155	42
CDL20-3	452	355	807	230	188	58
CDL20-4	517	390	907	260	208	74
CDL20-5	562	390	952	260	208	76
CDL20-6	607	390	997	260	208	82
CDL20-7	652	390	1042	260	208	84
CDL20-8	785	500	1285	330	255	153
CDL20-10	875	500	1375	330	255	157
CDL20-12	965	500	1465	330	255	170
CDL20-14	1055	500	1555	330	255	172
CDL20-17	1190	550	1740	330	255	195

Performance curve ISO9906 Annex A 2900rpm

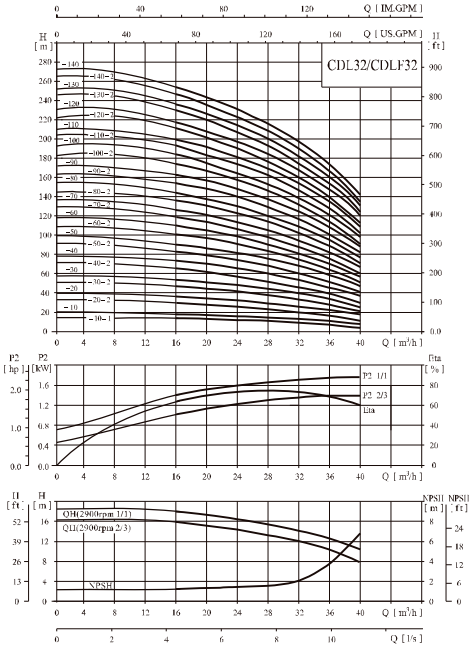

Installation sketch

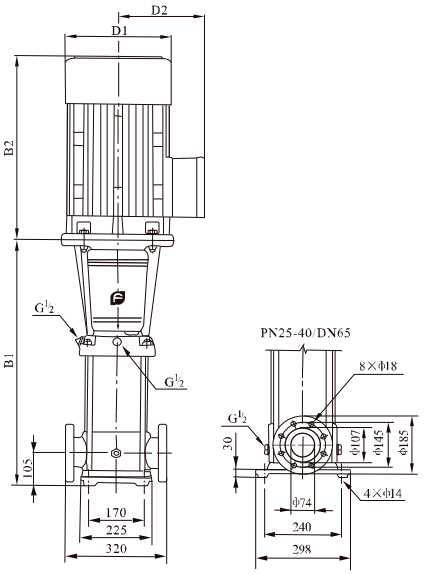

The overall dimensions of the single-phase motor and explosion-proof motor are a little different. Pls contact us for details.

Performance table

Model	Driving motor (kW)	Driving motor (hp)	Q (m³/h)	16	20	24	28	32	36	40
CDL32-10-1	1.5	2	H (m)	14	13	12	11	9	7	4
CDL32-10	2.2	3		18	17	15	14	13	11	8
CDL32-20-2	3.0	4		29	28	26	23	20	16	11
CDL32-20	4.0	5.5		36	34	32	29	27	23	18
CDL32-30-2	5.5	7.5		47	44	41	38	33	28	21
CDL32-30	5.5	7.5		54	51	48	44	40	35	27
CDL32-40-2	7.5	10		65	62	58	53	46	40	30
CDL32-40	7.5	10		72	69	65	59	53	47	37
CDL32-50-2	11	15		83	79	74	68	60	52	41
CDL32-50	11	15		90	86	81	74	67	59	47
CDL32-60-2	11	15		101	97	90	83	74	65	51
CDL32-60	11	15		108	104	97	90	81	72	57
CDL32-70-2	15	20		119	114	107	98	88	78	60
CDL32-70	15	20		126	121	113	105	95	85	67
CDL32-80-2	15	20		136	131	123	114	102	90	71
CDL32-80	15	20		144	138	130	120	109	97	77
CDL32-90-2	18.5	25		154	148	140	129	117	102	82
CDL32-90	18.5	25		162	156	147	136	124	109	88
CDL32-100-2	18.5	25		175	166	157	146	131	115	91
CDL32-100	18.5	25		182	173	164	152	138	122	98
CDL32-110-2	22	30		193	184	173	164	146	128	102
CDL32-110	22	30		200	191	180	168	153	135	109
CDL32-120-2	22	30		211	201	189	178	160	140	113
CDL32-120	22	30		218	208	196	184	167	147	120
CDL32-130-2	30	40		230	218	206	193	174	153	124
CDL32-130	30	40		237	225	213	200	181	160	131
CDL32-140-2	30	40		247	235	222	210	189	165	135
CDL32-140	30	40		255	242	229	216	196	172	142
CDL32-150-2	30	40		266	253	239	224	203	178	145
CDL32-150	30	40		274	260	246	231	210	185	152
CDL32-160-2	30	40		284	270	255	240	218	190	156
CDL32-160	30	40		292	277	262	246	225	197	163

Size and weight

Model	Size(mm) B1	B2	B1+B2	D1	D2	Weight (kg)
CDL32-10-1 /CDL32-10	505	290	795	190	155	64/68
CDL32-20-2 /CDL32-20	575	345 /355	920 /930	197 /230	165 /180	77/85
CDL32-30-2 /CDL32-30	645	390	1035	260	208	100
CDL32-40-2 /CDL32-40	715	390	1105	260	208	109
CDL32-50-2 /CDL32-50	890	500	1390	330	255	181
CDL32-60-2 /CDL32-60	960	500	1460	330	255	185
CDL32-70-2 /CDL32-70	1030	500	1530	330	255	199
CDL32-80-2 /CDL32-80	1100	500	1600	330	255	203
CDL32-90-2 /CDL32-90	1170	550	1720	330	255	222
CDL32-100-2 /CDL32-100	1240	550	1790	330	255	227
CDL32-110-2 /CDL32-110	1310	575	1885	360	285	272
CDL32-120-2 /CDL32-120	1380	575	1955	360	285	276
CDL32-130-2 /CDL32-130	1450	650	2100	400	310	337
CDL32-140-2 /CDL32-140	1520	650	2170	400	310	341
CDL32-150-2 /CDL32-150	1590	650	2240	400	310	345
CDL32-160-2 /CDL32-160	1660	650	2310	400	310	350

hydroo

CDL，CDLF42

Performance curve ISO9906 Annex A 2900rpm

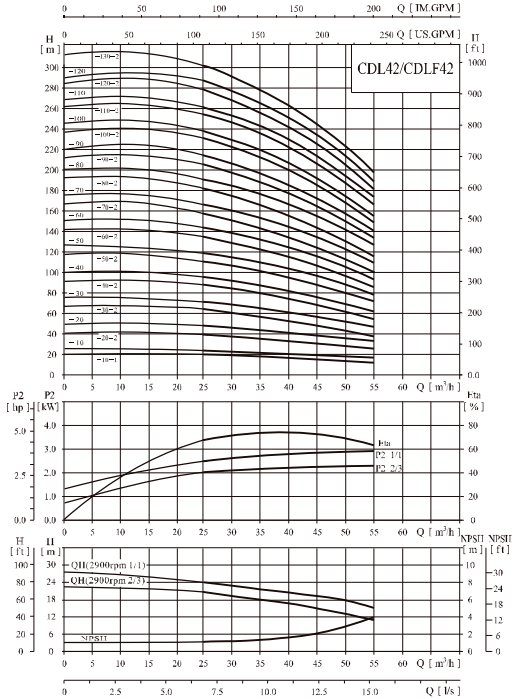

Installation sketch

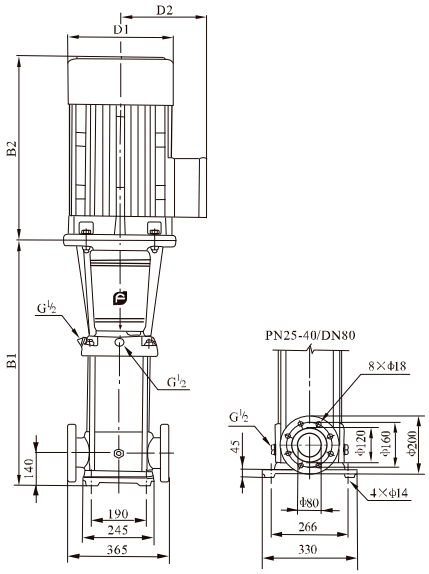

The overall dimensions of the single-phase motor and explosion-proof motor are a little different. Pls contact us for details.

Performance table

Model	Driving motor (kW)	Driving motor (hp)	Q (m³/h)	25	30	35	40	42	45	50	55
CDL42-10-1	3.0	4	H (m)	20	19	18	17	16	15	13	11
CDL42-10	4.0	5.5		24	23	22	21	20	19	18	16
CDL42-20-2	5.5	7.5		40	38	36	33	32	30	27	23
CDL42-20	7.5	10		48	46	44	42	41	39	35	31
CDL42-30-2	11	15		63	61	58	54	52	50	44	38
CDL42-30	11	15		71	69	66	63	61	58	53	47
CDL42-40-2	15	20		87	84	80	75	73	69	62	54
CDL42-40	15	20		95	92	88	84	81	78	71	62
CDL42-50-2	18.5	25		111	107	102	96	93	88	80	69
CDL42-50	18.5	25		119	115	110	105	101	97	88	78
CDL42-60-2	22	30		135	130	124	117	113	108	97	85
CDL42-60	22	30		143	138	132	125	122	116	106	93
CDL42-70-2	30	40		158	152	146	138	134	127	115	100
CDL42-70	30	40		166	161	154	146	142	135	124	109
CDL42-80-2	30	40		182	175	168	159	154	146	133	116
CDL42-80	30	40		190	184	176	167	162	154	141	124
CDL42-90-2	30	40		205	198	190	180	174	166	150	132
CDL42-90	37	50		214	207	198	188	183	174	159	140
CDL42-100-2	37	50		230	221	212	200	194	185	168	147
CDL42-100	37	50		238	230	220	209	203	193	177	155
CDL42-110-2	45	60		255	246	236	223	217	206	188	165
CDL42-110	45	60		263	255	244	232	225	214	196	173
CDL42-120-2	45	60		280	270	259	245	238	226	206	181
CDL42-120	45	60		289	280	268	255	247	236	216	190
CDL42-130-2	45	60		305	294	282	267	259	247	225	198

Size and weight

Model	Size(mm) B1	B2	B1+B2	D1	D2	Weight (kg)
CDL42-10-1 CDL42-10	561	345 /355	906 /916	197 /230	165 /188	83/90
CDL42-20-2 CDL42-20	641	390	1031	260	208	105 /110
CDL42-30-2 CDL42-30	826	500	1326	330	255	183
CDL42-40-2 CDL42-40	906	500	1406	330	255	197
CDL42-50-2 CDL42-50	986	550	1536	330	255	221
CDL42-60-2 CDL42-60	1066	575	1641	360	285	261
CDL42-70-2 CDL42-70	1146	650	1796	400	310	320
CDL42-80-2 CDL42-80	1226	650	1876	400	310	324
CDL42-90-2 CDL42-90	1306	650	1956	400	310	328 /352
CDL42-100-2 CDL42-100	1386	650	2036	400	310	355
CDL42-110-2 CDL42-110	1466	685	2151	450	345	426
CDL42-120-2 CDL42-120	1546	685	2231	450	345	432
CDL42-130-2	1626	685	2311	450	345	438

hydroo

Performance curve ISO9906 Annex A 2900rpm

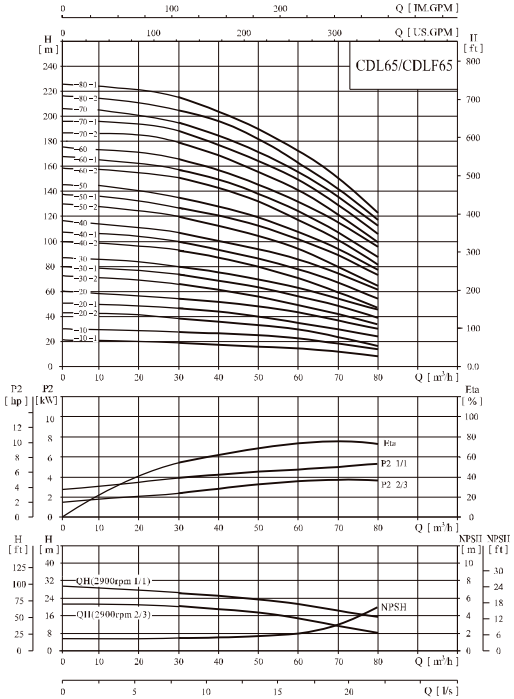

Installation sketch

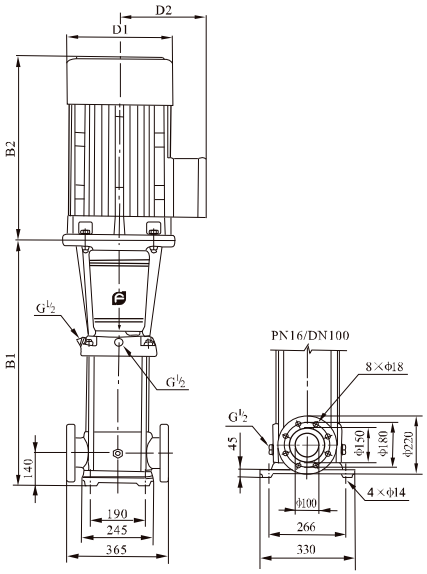

The overall dimensions of explosion-proof motor is a little different. Pls contact us for details.
（For CDL65 series, PN25-40/DN100 standard flange is also available if required）

Performance table

Model	Driving motor (kW)	Driving motor (hp)	Q (m³/h)	30	40	50	60	65	70	80
CDL65-10-1	4.0	5.5	H (m)	19	18	16	14	13	11	8
CDL65-10	5.5	7.5		27	25	23	21	20	18	15
CDL65-20-2	7.5	10		39	36	33	29	26	23	17
CDL65-20-1	11	15		46	44	40	36	33	30	24
CDL65-20	11	15		53	51	47	43	40	37	30
CDL65-30-2	15	20		66	62	56	50	46	41	32
CDL65-30-1	15	20		73	69	63	57	53	48	39
CDL65-30	18.5	25		80	76	70	64	60	55	46
CDL65-40-2	18.5	25		92	87	80	71	66	60	47
CDL65-40-1	22	30		100	94	87	78	73	67	54
CDL65-40	22	30		107	101	94	85	80	74	61
CDL65-50-2	30	40		121	114	105	95	88	80	64
CDL65-50-1	30	40		128	121	112	102	95	87	71
CDL65-50	30	40		136	129	119	109	102	94	78
CDL65-60-2	30	40		150	142	131	118	110	101	81
CDL65-60-1	37	50		157	149	138	125	117	108	88
CDL65-60	37	50		164	156	145	132	124	115	95
CDL65-70-2	37	50		179	169	156	141	132	121	99
CDL65-70-1	37	50		186	176	163	148	139	128	106
CDL65-70	45	60		193	183	170	155	146	135	112
CDL65-80-2	45	60		207	196	182	164	154	142	116
CDL65-80-1	45	60		215	203	189	171	161	149	123

Size and weight

Model	Size(mm) B1	B2	B1+B2	D1	D2	Weight (kg)
CDL65-10-1	561	335	916	230	188	93
CDL65-10	561	390	951	260	208	105
CDL65-20-2	644	390	1034	260	208	110
CDL65-20-1	754	500	1254	330	255	182
CDL65-20	754	500	1254	330	255	182
CDL65-30-2	836	500	1336	330	255	196
CDL65-30-1	836	500	1336	330	255	197
CDL65-30	836	550	1386	330	255	221
CDL65-40-2	919	550	1469	330	255	225
CDL65-40-1	919	575	1494	360	285	258
CDL65-40	919	575	1494	360	285	258
CDL65-50-2	1001	650	1651	400	310	319
CDL65-50-1	1001	650	1651	400	310	319
CDL65-50	1001	650	1651	400	310	320
CDL65-60-2	1084	650	1734	400	310	325
CDL65-60-1	1084	650	1734	400	310	349
CDL65-60	1084	650	1734	400	310	349
CDL65-70-2	1166	650	1816	400	310	353
CDL65-70-1	1166	650	1816	400	310	353
CDL65-70	1166	685	1851	460	340	420
CDL65-80-2	1248	685	1933	460	340	424
CDL65-80-1	1248	685	1933	460	340	424

hydroo

Performance curve ISO9906 Annex A 2900rpm

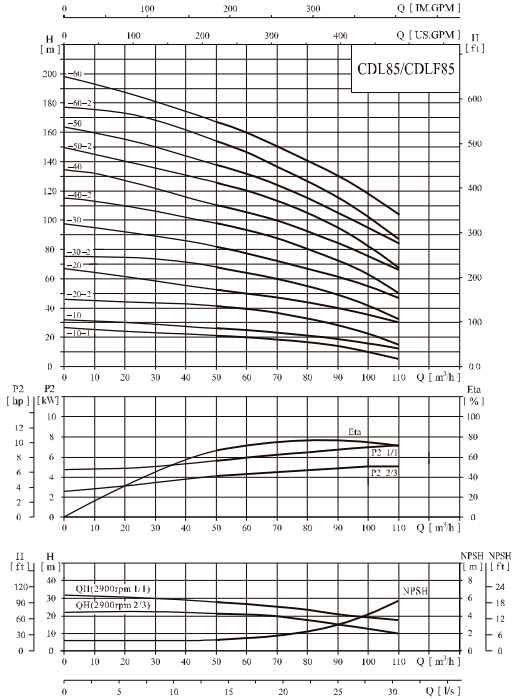

Installation sketch

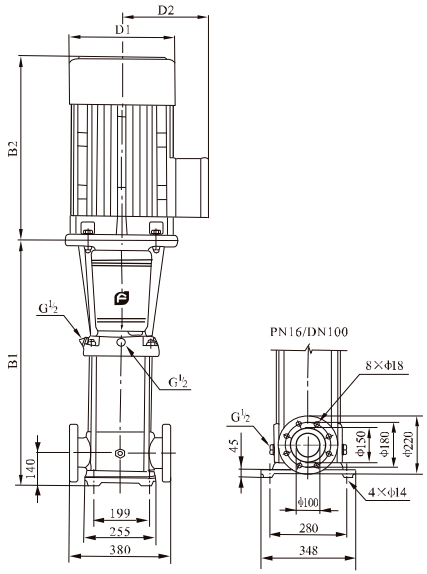

The overall dimensions of explosion-proof motor is a little different. Pls contact us for details.
（For CDL85 series, PN25-40/DN100 standard flange is also available if required）

Performance table

Model	Driving motor (kW)	Driving motor (hp)	Q (m³/h)	50	60	70	80	85	90	100	110
CDL85-10-1	5.5	7.5	H (m)	22	19	17	16	14	13	10	6
CDL85-10	7.5	10		25	24	22	21	20	19	16	12
CDL85-20-2	11	15		41	39	36	32	30	28	22	15
CDL85-20	15	20		53	50	47	44	41	40	36	30
CDL85-30-2	18.5	25		68	65	60	55	52	49	41	32
CDL85-30	22	30		81	77	72	67	64	62	55	48
CDL85-40-2	30	40		98	93	87	80	75	72	62	50
CDL85-40	30	40		110	105	100	92	86	84	76	66
CDL85-50-2	37	50		126	120	113	104	98	93	81	68
CDL85-50	37	50		139	131	124	115	110	106	94	83
CDL85-60-2	45	60		155	148	139	129	122	117	102	86
CDL85-60	45	60		168	160	150	141	134	130	117	103

Size and weight

Model	Size(mm) B1	B2	B1+B2	D1	D2	Weight (kg)
CDL85-10-1	571	390	961	260	208	105
CDL85-10	571	390	961	260	208	110
CDL85-20-2	773	500	1273	330	255	181
CDL85-20	773	500	1273	330	255	192
CDL85-30-2	865	550	1415	330	255	215
CDL85-30	865	575	1440	360	285	252
CDL85-40-2	957	650	1607	400	310	312
CDL85-40	957	650	1607	400	310	312
CDL85-50-2	1049	650	1699	400	310	336
CDL85-50	1049	650	1699	400	310	336
CDL85-60-2	1141	685	1826	460	340	407
CDL85-60	1141	685	1826	460	340	407

Performance curve ISO9906 Annex A 2950rpm

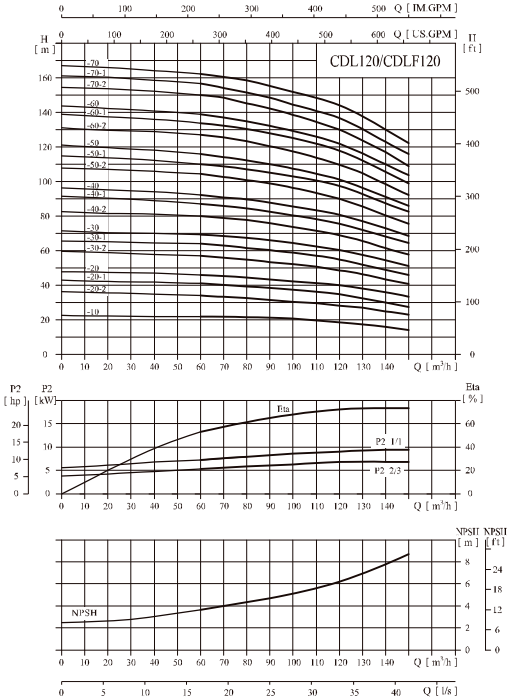

Installation sketch

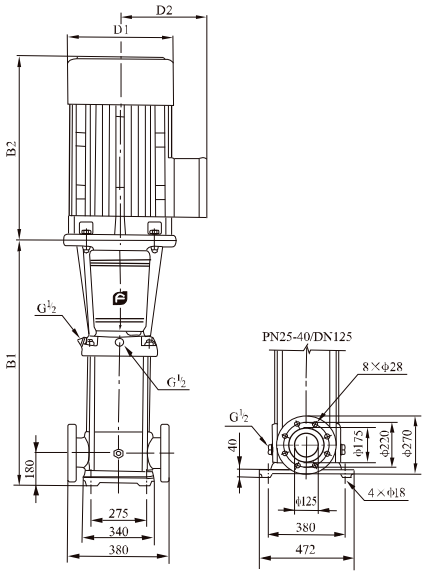

The overall dimensions of explosion-proof motor is a little different. Pls contact us for details.

Performance table

Model	Driving motor (kW)	Driving motor (hp)	Q (m³/h)	60	70	80	90	100	110	120	130	140	150
CDL120-10	11	15	H (m)	22	21.8	21.6	21	20.5	19.5	18.5	17	16	15
CDL120-20-2	15	20		34	33.6	33	31	30.2	30	28.5	27	25	24
CDL120-20-1	18.5	25		41	40	39.5	38.5	37	36.5	34.5	32.5	30	27.5
CDL120-20	22	30		46	45	44.5	43.5	42.4	41	40	38	36	33.5
CDL120-30-2	30	40		57	56	55	53.5	52	51	49	46.5	43.5	41
CDL120-30-1	30	40		64	63	62	60	58.5	57.5	55.5	52	49	46
CDL120-30	30	40		69.5	68.5	67.5	66	64.4	62.5	61	57.5	54.5	51
CDL120-40-2	37	50		80.5	79	78	76	73.5	72	69	66	61.5	58
CDL120-40-1	37	50		87	86	84.5	82	80	78	76	72	68	64.5
CDL120-40	45	60		92.5	91	90	88	85.5	83	81	77	73	68.5
CDL120-50-2	45	60		104.5	103	101	99	96	93	90	85.5	80.5	75.5
CDL120-50-1	45	60		110.5	109	107.5	105	102	100	97	92	86.5	83
CDL120-50	55	75		115.5	114	113	110	107.5	104.5	101.5	96	91	86
CDL120-60-2	55	75		128	125.5	123	121	117.3	113.5	110	104.5	98.5	92.5
CDL120-60-1	55	75		134	132	130.5	127	124	121	118	111	105	100
CDL120-60	75	100		139	137	135	132	128.8	126	123	116	110	104
CDL120-70-2	75	100		151	148	145.5	143	138.6	134	130	123.5	116.5	109
CDL120-70-1	75	100		156.5	154	152	148.5	144.5	141	137.5	130	123	116.5
CDL120-70	75	100		162.5	160.5	158.5	155	151	148	145	137	129	123

Size and weight

Model	Size(mm) B1	B2	B1+B2	D1	D2	Weight (kg)
CDL120-10	840	500	1340	330	255	230
CDL120-20-2	1000	500	1500	330	255	245
CDL120-20-1	1000	550	1550	330	255	250
CDL120-20	1000	575	1575	360	285	285
CDL120-30-2	1160	650	1810	400	310	360
CDL120-30-1	1160	650	1810	400	310	360
CDL120-30	1160	650	1810	400	310	360
CDL120-40-2	1320	650	1970	400	310	400
CDL120-40-1	1320	650	1970	400	310	400
CDL120-40	1320	685	2005	460	340	460
CDL120-50-2	1480	685	2165	460	340	470
CDL120-50-1	1480	685	2165	460	340	470
CDL120-50	1510	760	2270	540	370	575
CDL120-60-2	1670	760	2430	540	370	585
CDL120-60-1	1670	760	2430	540	370	585
CDL120-60	1670	845	2515	580	410	705
CDL120-70-2	1830	845	2675	580	410	715
CDL120-70-1	1830	845	2675	580	410	715
CDL120-70	1830	845	2675	580	410	715

Performance curve ISO9906 Annex A 2950rpm

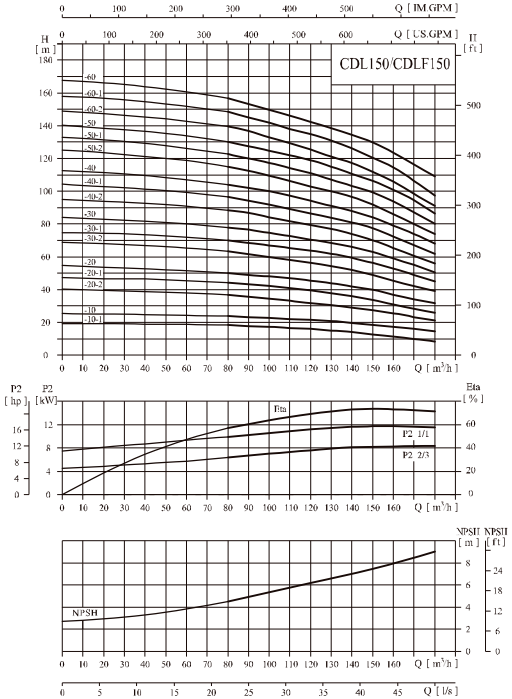

Installation sketch

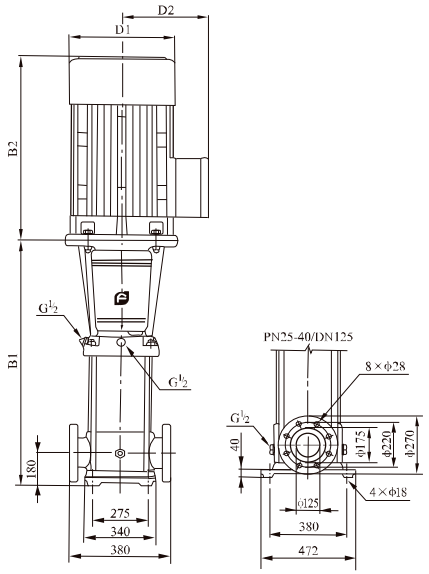

The overall dimensions of explosion-proof motor is a little different. Pls contact us for details.

Performance table

Model	Driving motor (kW)	Driving motor (hp)	Q (m³/h)	80	90	100	110	120	130	140	150	160	170	180
CDL150-10-1	11	15	H (m)	18.3	17.8	17.3	17	16	15	14	12.5	11	10	8.5
CDL150-10	15	20		24	23	22.5	22	21.5	20.5	20	18.5	17	16	15
CDL150-20-2	18.5	25		37	35.5	34	33	32	31	29	27.5	26	23	21
CDL150-20-1	22	30		44.3	43	42	40	39	38.5	37.5	35	33	30	27
CDL150-20	30	40		50	49	48	47	45.5	44	42	40	37	34	32
CDL150-30-2	30	40		63.5	61	59	57.5	56	54.5	53	49	45.5	42	39
CDL150-30-1	37	50		70	68	67	65	63	62	60	56	53	49	45
CDL150-30	37	50		78	76.5	75	73	70.5	68	66	63	59	55	50.5
CDL150-40-2	45	60		89	87	84	81.5	79	77	74.5	70.5	65.5	60	56
CDL150-40-1	45	60		96.5	94	91.5	89	86.5	84	81.5	77	72.5	67	62
CDL150-40	55	75		104	102	100	97	95	91	88	84	79.5	74	68
CDL150-50-2	55	75		115.5	112	109	106	102.5	100	97	92	86	79	73.5
CDL150-50-1	75	100		122.5	119.5	117	113.5	111.5	107.5	104.5	99	93.5	87	80
CDL150-50	75	100		130	127.5	125	121	119	115	111.5	106.5	101	94.5	86.5
CDL150-60-2	75	100		140	137	133	130	126	121	118	112	106	98	91
CDL150-60-1	75	100		148.5	145	141.7	137.5	135	131	127	120.5	114.5	106.5	97.5
CDL150-60	75	100		157	153	149	145	142	139.5	137	130	123.5	116	109

Size and weight

Model	Size(mm) B1	B2	B1+B2	D1	D2	Weight (kg)
CDL150-10-1	840	500	1340	330	255	230
CDL150-10	840	500	1340	330	255	235
CDL150-20-2	1000	550	1550	330	255	250
CDL150-20-1	1000	575	1575	360	285	295
CDL150-20	1000	650	1650	400	310	350
CDL150-30-2	1160	650	1810	400	310	360
CDL150-30-1	1160	650	1810	400	310	360
CDL150-30	1160	650	1810	400	310	385
CDL150-40-2	1320	685	2005	460	340	460
CDL150-40-1	1320	685	2005	460	340	460
CDL150-40	1350	760	2110	540	370	560
CDL150-50-2	1510	760	2270	540	370	570
CDL150-50-1	1510	845	2355	580	410	690
CDL150-50	1510	845	2355	580	410	690
CDL150-60-2	1670	845	2515	580	410	700
CDL150-60-1	1670	845	2515	580	410	700
CDL150-60	1670	845	2515	580	410	700

Performance curve ISO9906 Annex A 2950rpm

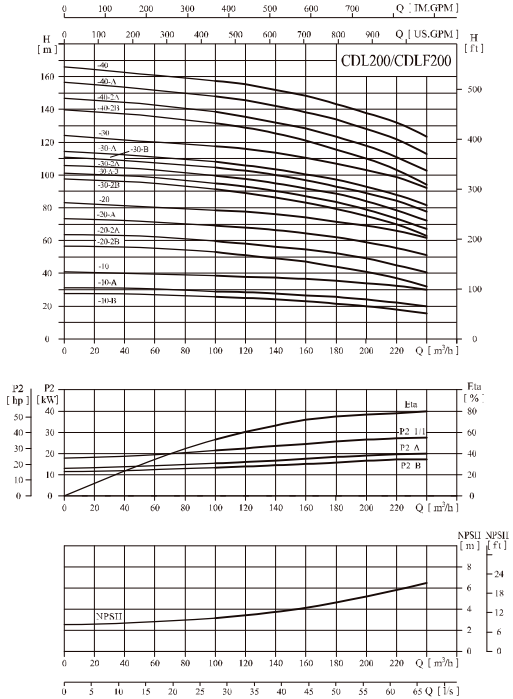

Installation sketch

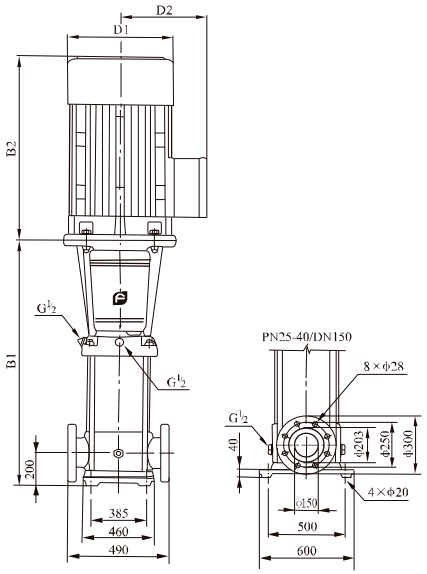

The overall dimensions of explosion-proof motor is a little different. Pls contact us for details.

Performance table

Model	Driving motor (kW)	Driving motor (hp)	Q (m³/h)	100	120	140	160	180	200	220	240
CDL200-10-B	18.5	25	H (m)	25.5	25	24	23	21.5	20	18	15.5
CDL200-10-A	22	30		29	28.5	27.5	26.5	25.5	24	22	20
CDL200-10	30	40		38.5	38	37.5	36.5	35	34	32.5	30
CDL200-20-2B	37	50		53	51	49	47	44	41	37	32
CDL200-20-2A	45	60		59.5	58	56	54	52.5	49	44.5	40.5
CDL200-20-A	55	75		69	68	66	64	62	59	55.5	51
CDL200-20	55	75		78.5	77.5	76	74	71.5	69	66	61.5
CDL200-30-2B	75	100		91.5	89	86.5	83.5	79	75	70	63
CDL200-30-A-B	75	100		95	93	90	87	83.5	79	73.5	67
CDL200-30-2A	75	100		99.5	97.5	94.5	91.5	89	84	78.5	72
CDL200-30-B	75	100		104.5	102.5	100	97	93	89	84.5	77.5
CDL200-30-A	75	100		108	106	103.5	100.5	97.5	93	88	81.5
CDL200-30	90	120		117.5	116	113.5	110.5	107	103	99	92
CDL200-40-2B	90	120		131.5	129	125.5	121	115.5	110	103.5	94
CDL200-40-2A	110	150		138.5	136	132	128	124	118	111	102.5
CDL200-40-A	110	150		148	145.5	142.5	138	134	128	122	113
CDL200-40	110	150		157.5	155.5	152.5	148	143.5	138	132.5	123.5

Size and weight

Model	Size(mm) B1	B2	B1+B2	D1	D2	Weight (kg)
CDL200-10-B	907	550	1457	330	255	311
CDL200-10-A	907	575	1482	360	285	347
CDL200-10	907	650	1557	400	310	403
CDL200-20-2B	1101	650	1751	400	310	447
CDL200-20-2A	1101	685	1786	460	340	504
CDL200-20-A	1131	760	1891	540	370	595
CDL200-20	1131	760	1891	540	370	595
CDL200-30-2B	1325	845	2170	580	410	748
CDL200-30-A-B	1325	845	2170	580	410	748
CDL200-30-2A	1325	845	2170	580	410	748
CDL200-30-B	1325	845	2170	580	410	748
CDL200-30-A	1325	845	2170	580	410	748
CDL200-30	1325	895	2220	580	410	817
CDL200-40-2B	1519	895	2414	580	410	830
CDL200-40-2A	1519	1140	2659	645	550	1180
CDL200-40-A	1519	1140	2659	645	550	1180
CDL200-40	1519	1140	2659	645	550	1180

hydroo